# Westinghouse

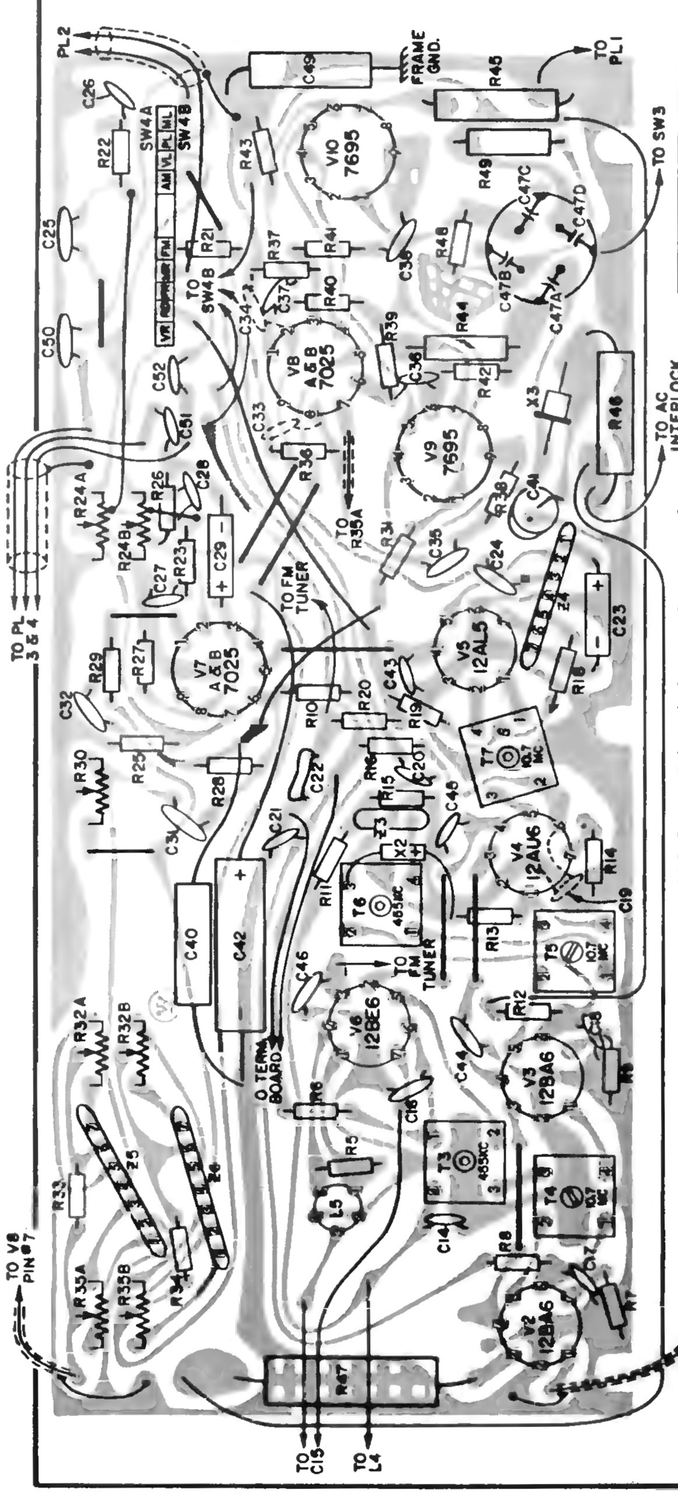


Bottom view of Chassis V-2515-4 PC board showing location of top components in solid outline. Tube pin numbering is for bottom of socket.

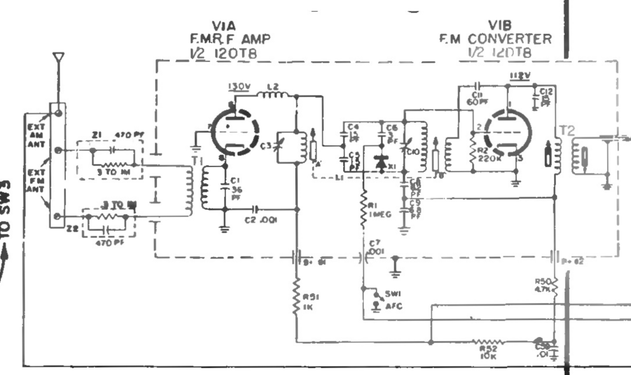


## MODELS

| | |
|---|---|
| H-M1790 | H-M1810/A/B |
| H-M1791 | H-M1811/A/B |
| H-M1793 | H-M1813/A/B |
| | H-M1815/A/B |

H-M1910 *(walnut)*
H-M1911 *(cherry)*
H-M1913 *(maple)*
H-M1914 *(butternut)*

**CHASSIS V-2515-4**

and similar Models H-M1760, H-M1761, H-M1763, using Chassis V-2515-8.

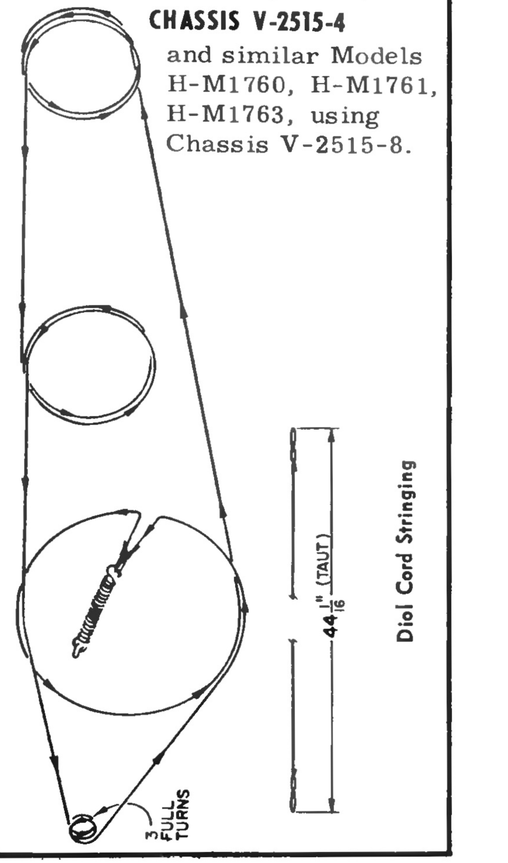


Diol Cord Stringing

## WESTINGHOUSE Chassis V-2515-4, Models H-M1810/A/B, H-M1811/A/B, H-M1813/A/B, H-M1815/A/B, H-M1910, H-M1911, H-M1913, and H-M1914

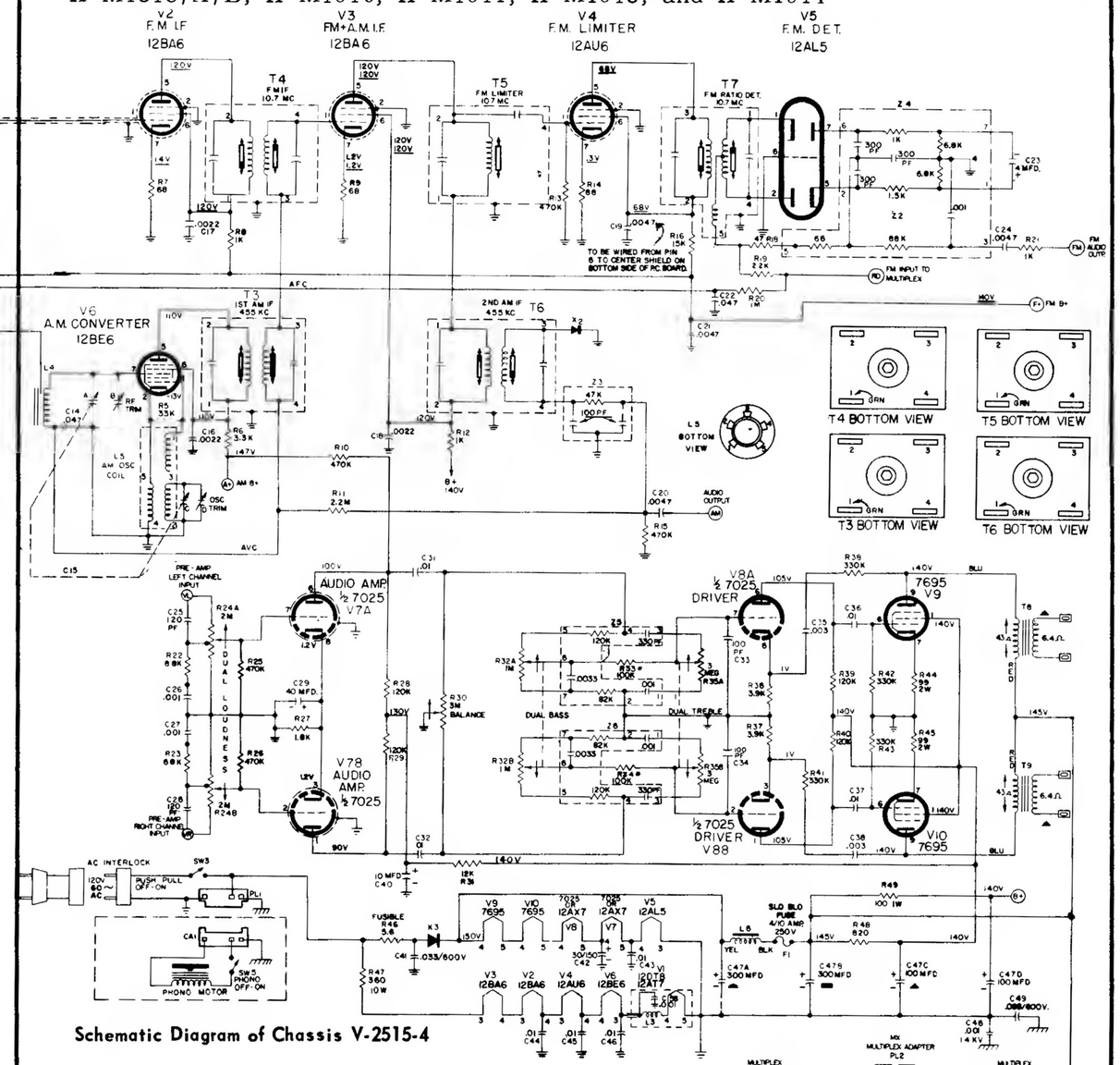


Schematic Diagram of Chassis V-2515-4

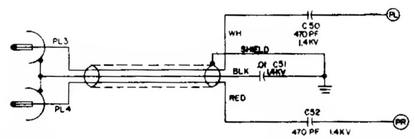

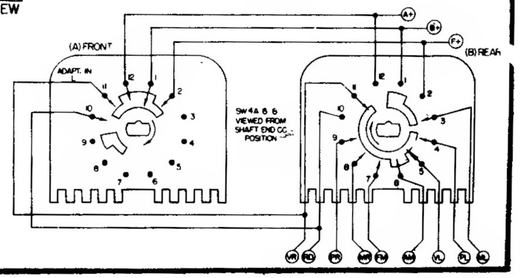


1. ALL CAPACITANCE VALUES IN MFD. AND ALL RESISTANCE VALUES IN OHMS, ½ WATT, UNLESS OTHERWISE SPECIFIED.
2. D.C. VOLTAGES MEASURED FROM POINTS INDICATED TO CIRCUIT GROUND, NO SIGNAL APPLIED, USING A V.T.V.M., LINE VOLTAGE SET AT 120 V.A.C. LOUDNESS AT MIN. TUNING CAP AT MAX.
3. * R33 & R34 NOT INCLUDED IN PACKAGE CIRCUITS Z5 & Z6.
4. UNDERLINED VOLTAGES ARE TAKEN IN F.M. POSITION.
5. ALL REFERENCES TO LEFT & RIGHT ARE AS VIEWED FACING FRONT OF SET
6. SW4A, B IS SHOWN IN THE CCW POSITION, (AM POSITION)
7. REAR SECTIONS OF CONTROLS (FARTHEST FROM SHAFTS) ARE RIGHT CHANNEL.
8. ARROWS ON CONTROLS INDICATE CW ROTATION (CONTROL VIEWED FROM SHAFT END.)